Centre Number	Candidate Number	Name

UNIVERSITY OF CAMBRIDGE INTERNATIONAL EXAMINATIONS
General Certificate of Education
Advanced Subsidiary Level and Advanced Level

PHYSICS **9702/03**

Paper 3 Practical Test

October/November 2004

1 hour 15 minutes

Candidates answer on the Question Paper.
Additional Materials: As specified in the Confidential Instructions

READ THESE INSTRUCTIONS FIRST

Write your Centre number, candidate number and name on all the work you hand in.
Write in dark blue or black pen in the spaces provided on the Question Paper.
You may use a soft pencil for any diagrams, graphs or rough working.
Do not use staples, paper clips, highlighters, glue or correction fluid.

Answer the **one** question.
You are expected to record all your observations as soon as they are made, and to plan the presentation of the records so that it is not necessary to make a fair copy of them. The working of the answers is to be handed in.
Marks are mainly given for a clear record of the observations actually made, for their suitability and accuracy, and for the use made of them.
Additional answer paper and graph paper should be submitted only if it becomes necessary to do so.
You are reminded of the need for good English and clear presentation in your answers.
At the end of the examination, fasten all your work securely together.

If you have been given a label, look at the details. If any details are incorrect or missing, please fill in your correct details in the space given at the top of this page.

Stick your personal label here, if provided.

For Examiner's Use

This document consists of **7** printed pages and **1** blank page.

© UCLES 2004

1 In this experiment you will investigate the oscillations of a pendulum with a yielding support.

(a) (i) Tie the end of the thread to a hole in the end of the hacksaw blade so that the length l of the pendulum is about 0.5 m. Record the value of l.

l = ... m

(ii) Place the blade between the two blocks of wood and tighten the wing nuts so that the blade is held firmly.

(iii) Clamp the wooden blocks to the bench so that the blade protrudes horizontally from the wooden blocks as shown in Fig. 1.1. The length d from the blocks to the thread should be 0.24 m.

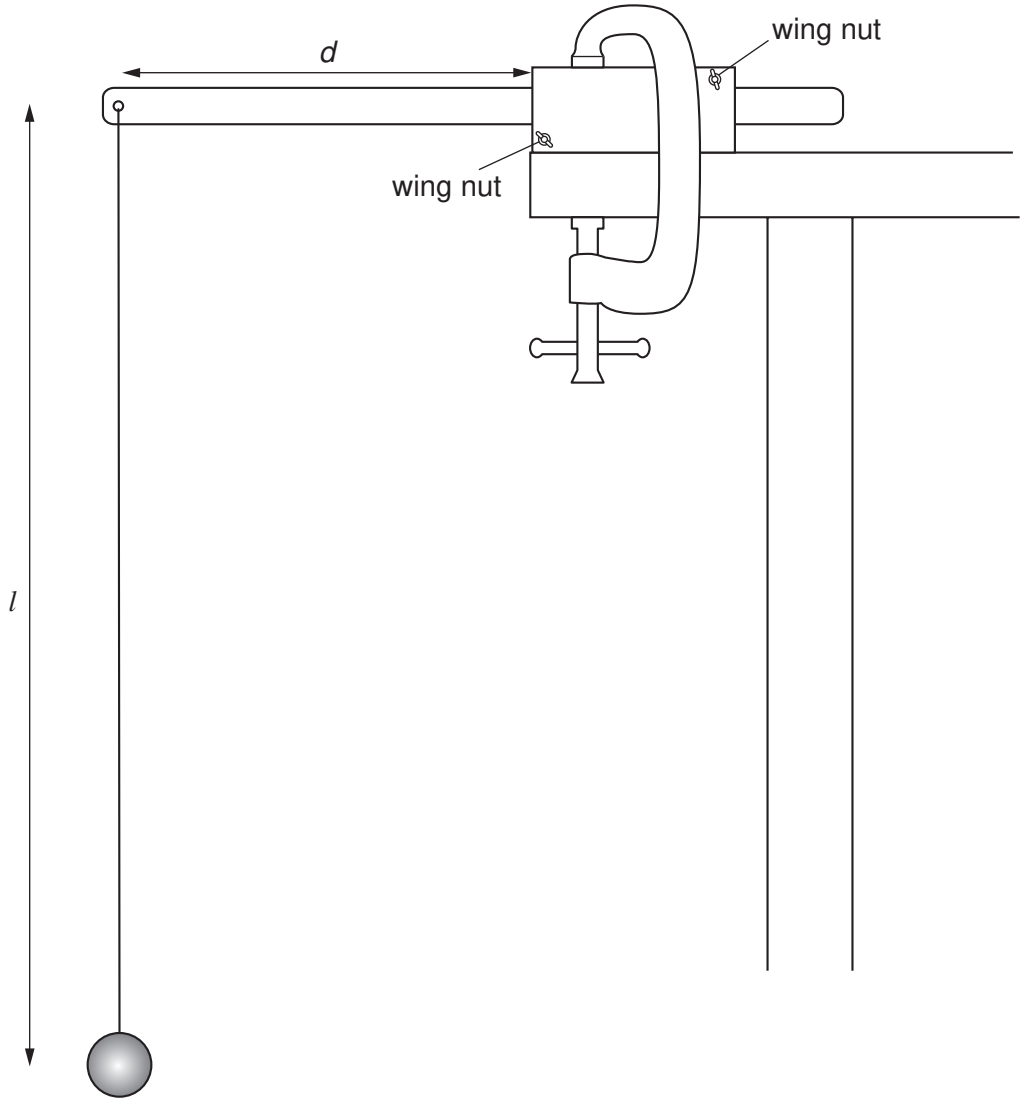

Fig. 1.1

© UCLES 2004

(b) (i) Measure and record the value of d.

d = ...

(ii) Determine the percentage uncertainty in this value of d.

% uncertainty in d = ...

(c) (i) Gently displace the pendulum so that it performs small oscillations in a vertical plane perpendicular to the blade, as shown in Fig. 1.2.

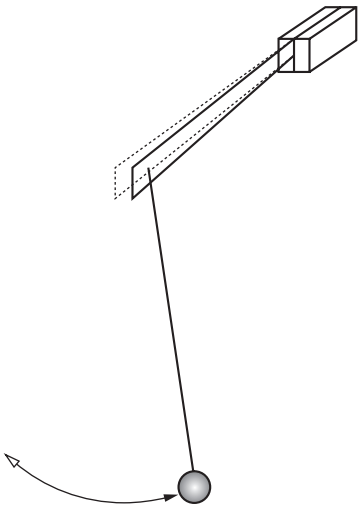

Fig. 1.2

(ii) Make and record measurements to determine the period T of these oscillations.

T = ...

For Examiner's Use

(d) Adjust the position of the blade to give a new value of d and repeat **(b)(i)** and **(c)** until you have a total of six sets of readings for d and T, where 7.0 cm $\leq d \leq$ 24.0 cm. Include the values of T^2 and d^3 in your table of results below.

(e) **(i)** Plot a graph of T^2 (y-axis) against d^3 (x-axis).

(ii) Draw the line of best fit.

(iii) Determine the gradient and y-intercept of this line.

gradient = ...

y-intercept = ...

© UCLES 2004

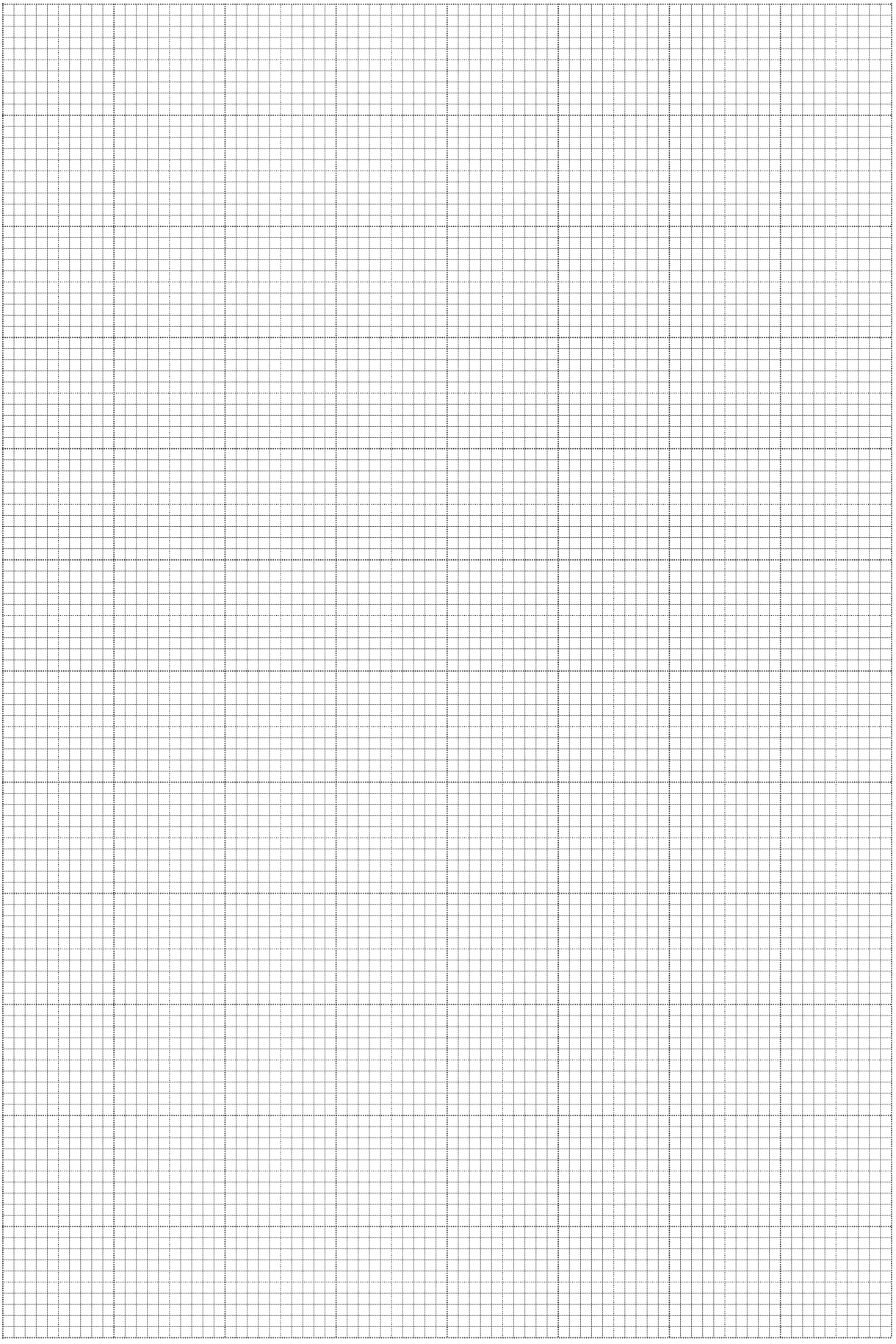

For Examiner's Use

(f) Theory suggests that T and d are related by the equation

$$T^2 = kd^3 + \frac{4\pi^2 l}{g},$$

where g is the acceleration of free fall and k is a constant.

Use your answers from **(e)(iii)** and the value of l to find values for k and g. Include appropriate units in each case.

k = ...

g = ...

(g) A clockmaker wishes to make a pendulum clock whose pendulum has a period of two seconds. Calculation shows that the length of a pendulum of this period with a fixed support would be about one metre. The clockmaker wants to make a small case, and therefore considers using a pendulum with a yielding support.

(i) Use the results of your experiment to calculate a value for d that would give a period of two seconds for the pendulum you have used.

d = ...

© UCLES 2004

(ii) Use your answer to **(i)** to suggest whether the use of a yielding support would save space.

.....

.....

.....

.....

© UCLES 2004

BLANK PAGE

Every reasonable effort has been made to trace all copyright holders. The publishers would be pleased to hear from anyone whose rights we have unwittingly infringed.

University of Cambridge International Examinations is part of the University of Cambridge Local Examinations Syndicate (UCLES), which is itself a department of the University of Cambridge.